Honeywell

Series 2000
Electronic Temperature Sensors

PRODUCT DATA

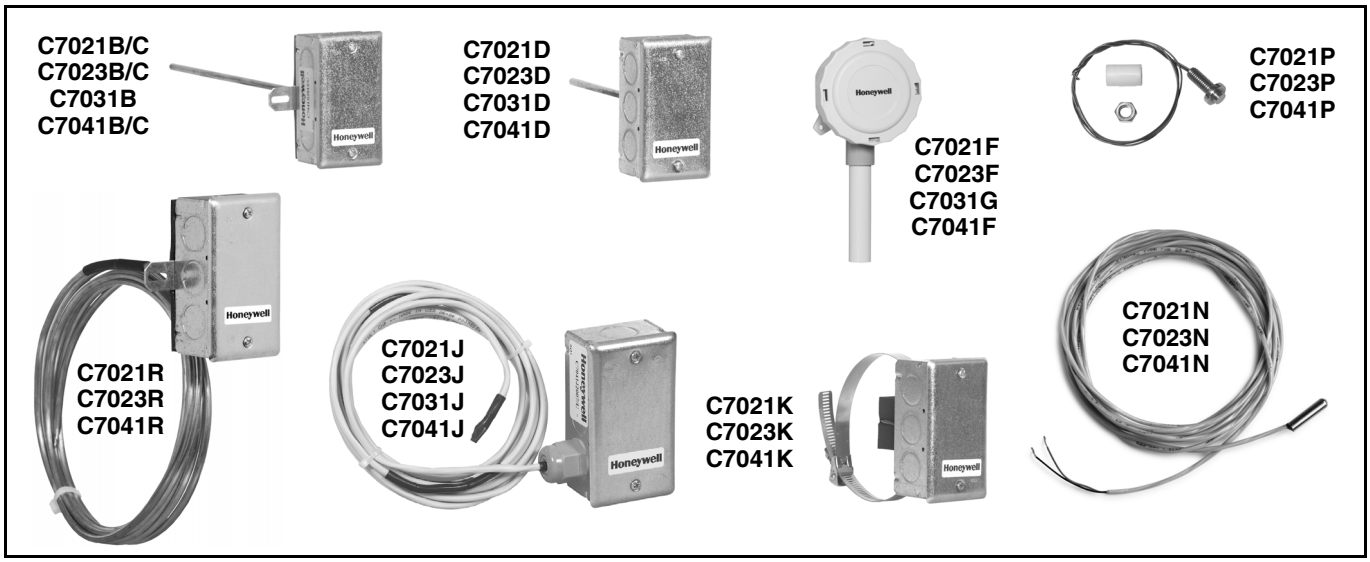

APPLICATION

The Series 2000 C7021, C7023, C7031 and C7041 Electronic Temperature Sensors are designed for use with electronic controllers in domestic or commercial heating and cooling systems.

FEATURES

- **C7021D, C7023D, C7031D, C7041D for immersion mounting sense water temperature.**
- **C7021F, C7023F, C7031G, C7041F sense outdoor air temperature and are weatherproof for outdoor use (knockouts allow for 1/2 in. conduit connection).**
- **C7021J/R, C7023J/R, C7031J, C7041J/R sense average duct air temperature.**
- **C7021B/C, C7023B/C, C7031B, C7041B/C sense duct air temperature.**
- **C7021K, C7023K, C7041K with strap-on mounting senses water temperature.**
- **C7021N, C7023N, C7041N probe senses water or air temperature.**
- **C7021P, C7023P, C7041P senses air temperature.**
- **Solid state components not affected by dust or dirt.**

Contents

Application 1
Features 1
Specifications 2
Installation 7
Wiring 10
Operation and Checkout 10

63-2590-06

SPECIFICATIONS

See Table 1 for additional specifications.

Compatibility:

Use Series 2000 C7031, C7041 Temperature Sensors with Excel 10, 15, 80, 100, and 500 controllers.

Series 2000 C7031B,D,G,J sensors are compatible with various Honeywell controllers. The C7031G2014 is compatible with the T7350 Commercial Thermostat.

Series 2000 C7021 temperature sensors are compatible with TB7600, TB7300 and TB7200 communicating thermostats.

Series 2000 C7023 temperature sensors are compatible with WEBs-AX I/O modules.

Dimensions:

See Fig. 1 through Fig. 11.

Sensor Accuracy:

±0.36°F at 77°F (±0.2°C at 25°C) for 20K ohm NTC sensors and 10K ohm NTC Type II and Type III sensors.

Long-term Temperature Sensor Drift (for C7041 models only): Maximum sensor drift is nominally +/-0.13°F after 5 years of operation, no appreciable drift thereafter. No calibration of the device is possible. Long term drift calibration/maintenance through controller software is typically not necessary.

Accessories:

32006523-001 20K Probe: to allow replacement of old style C7031D1062-1 with non-threaded well.

50001774-001 Stainless Steel 304 Well Assembly: 1/2 in. external and internal NPT threading. Use with C7021D/C7023D/C7031D/C7041D.

50001775-001 Well Adapter: Used with C7021D/C70231D/C7031D/C7041D to allow threading sensor into previously installed Series 1000 32005960-001 Well.

Table 1. Sensor Selection and Application Guide

Model	Control Application	Element Insertion Length	Element Operating Range	Element Max Ambient Temperature	Sensor Resistance in Ohms	Sensitivity[a]
C7021B	Duct discharge air	6 in. (152) or 12	-40° to 250°F (-40° to 121°C)	250°F (121°C)	10K Ohms NTC @ 77° F Type II	—
C7021C	Duct discharge air	18 in. (457 mm)				
C7021D	Hot or chilled water [b]	5 in. (127 mm)				
C7021F	Outdoor air	—	-40° to 158°F (-40° to 70°C)			
C7021J	Duct discharge air (averaging sensor with 4 elements)	12 ft (3.7m)	-40° to 250°F (-40° to 121°C)			
C7021K	Hot water (strap-on mounting)[f]					
C7021N	Water / Air (bullet probe)					
C7021P	Space air temperature (button probe)					
C7021R	Duct discharge air (rigid copper averaging sensor)	12 ft (3.7m) or 24 ft (7.3m)				
C7023B	Duct discharge air	6 in. (152) or 12 in. (305 mm)				
C7023C	Duct discharge air	18 in. (457 mm)				
C7023D	Hot or chilled water [b]	5 in. (127 mm)				

ORDERING INFORMATION

When purchasing replacement and modernization products from your TRADELINE® wholesaler or distributor, refer to the TRADELINE® Catalog or price sheets for complete ordering number. If you have additional questions, need further information, or would like to comment on our products or services, please write or phone:

1. Your local Honeywell Environmental and Combustion Controls Sales Office (check white pages of your phone directory).
2. Honeywell Customer Care
   1885 Douglas Drive North
   Minneapolis, Minnesota 55422-4386
3. http://customer.honeywell.com or http://customer.honeywell.ca

International Sales and Service Offices in all principal cities of the world. Manufacturing in Belgium, Canada, China, Czech Republic, Germany, Hungary, Italy, Mexico, Netherlands, United Kingdom, and United States.

Table 1. Sensor Selection and Application Guide

Model	Control Application	Element Insertion Length	Element Operating Range	Element Max Ambient Temperature	Sensor Resistance in Ohms	Sensitivity[a]
C7023F	Outdoor air		-40° to 158°F (-40° to 70°C)	250°F (121°C)	10K Ohms NTC @ 77° F Type II	—
C7023J	Duct discharge air (averaging sensor with 4 elements)	12 ft (3.7m)	-40° to 250°F (-40° to 121°C)			
C7023K	Hot water (strap-on mounting)[f]					
C7023N	Water / Air (bullet probe)					
C7023P	Space air temperature (button probe)					
C7023R	Duct discharge air (rigid copper averaging sensor)	12 ft (3.7m) or 24 ft (7.3m)	-40° to 250°F (-40° to 121°C)	250°F (121°C)	10K Ohms NTC @ 77° F Type II	—
C7031B	Duct discharge air	6 in. (152 mm)	-40° to 250°F (-40° to 121°C)	250°F (121°C)	1097 at 77° (25°C)[c]	2.1 (3.9)
C7031D	Hot or chilled water	5 in. (127 mm)	40° to 350°F (4° to 115°C)	370°F (187°C)	1097 at 77° (25°C)[c]	2.1 (3.9)
C7031G -2006	Outdoor air	—	-40° to 120°F (-40° to 49°C)	120°F (49°C)	1715 at 90°F (32°C)[c]	2.2 (3.4)
C7031G -2014[d]	Outdoor air	—	-40° to 120°F (-40° to 49°C)	120°F (49°C)	3484 at 77°F (25°C)[c]	2.1 (3.9)
C7031J	Duct discharge air (averaging sensor with 4 elements)	12 ft (3.7m)	40° to 180°F (4° to 82°C)	250°F (121°C)	1097 at 77° (25°C)[c]	2.1 (3.9)
C7041B	Duct discharge air	6 in. (152 mm) or 12 in. (305 mm)	-40° to 250°F (-40° to 121°C)	250°F (121°C)	20K Ohms NTC at 77°F (25°C)[e]	—
C7041C	Duct discharge air	18 in. (457 mm)				
C7041D	Hot or chilled water [b]	5 in. (127 mm)				
C7041F	Outdoor air	—	-40° to 158°F (-40° to 70°C)			
C7041J	Duct discharge air (averaging sensor with 4 elements)	12 ft (3.7m)	-40° to 250°F (-40° to 121°C)			
C7041K	Hot water (strap-on mounting)[f]	—				
C7041N	Water / Air (bullet probe)					
C7041P	Space air temperature (button probe)	—				
C7041R	Duct discharge air (rigid copper averaging sensor)	12 ft (3.7m) or 24 ft (7.3m)				

[a]Control sensitivity in ohms per degree F (per degree C) for element operating range.

[b] Order immersion well separately (50001774-001)

[c] Resistance increases as temperature increases.

[d] Use with T7350 Commercial Thermostat.

[e] Nonlinear resistance decreases as temperature increases.

[f] Not equipped with well; temperature sensed at surface of pipe.

Sensor Resistance

Table 2. Typical Resistance of Sensor Models.

	Typical Resistance (in ohms)			
	C7021 Sensors (10K Ohm NTC Type II)	C7023 Sensors (10K Ohm NTC Type III)	C7031 Sensors (1097 Ohms PTC)	C7041 Sensors (20K ohm NTC)
At 41°F (5°C)	25,392	23,467	1,020	54,200
At 50°F (10°C)	19,901	18,789	1,039	41,758
At 59°F (15°C)	15,712	15,137	1,059	32,427
At 68°F (20°C)	12,493	12,268	1,078	25,370
At 77°F (25°C)	10,000	10,000	1,097	20,000
At 86°F (30°C)	8,057	8,196	1,117	15,856
At 95°F (35°C)	6,531	6,754	1,136	12,654

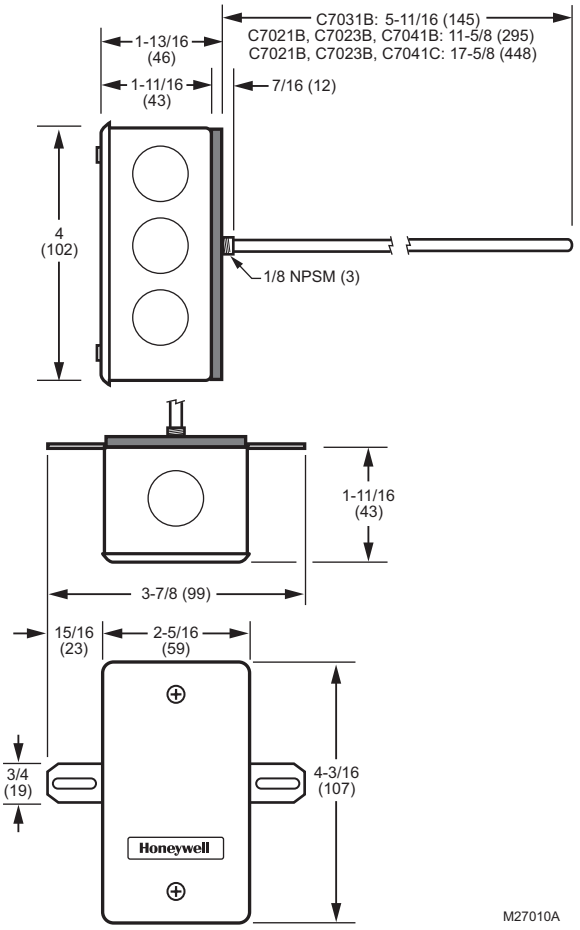

Fig. 1. C7021B/C, C7023B/C, C7041B/C dimensions in in. (mm).

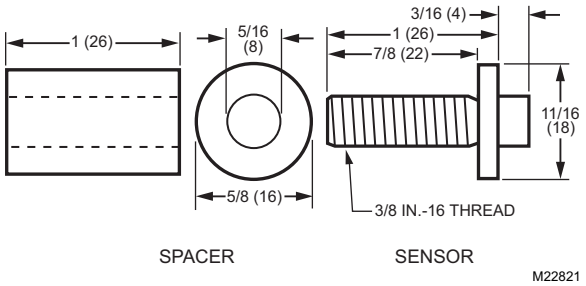

Fig. 2. Dimensions of C7021P, C7023P, C7041P in in. (mm)

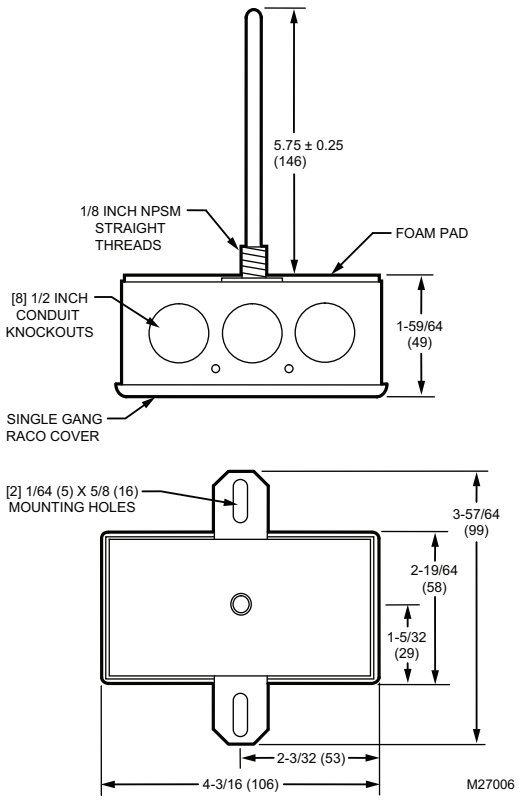

Fig. 3. C7031B dimensions in in. (mm)

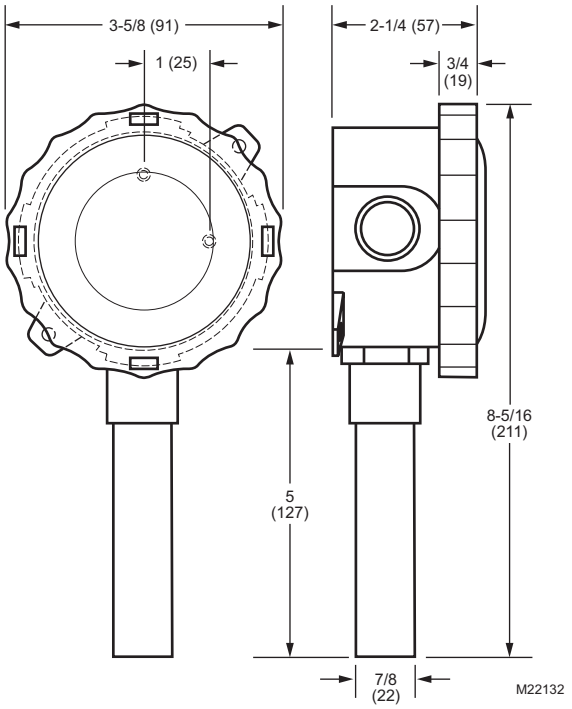

Fig. 4. C7031G, C7021F, C7023F, C7041F dimensions in in. (mm).

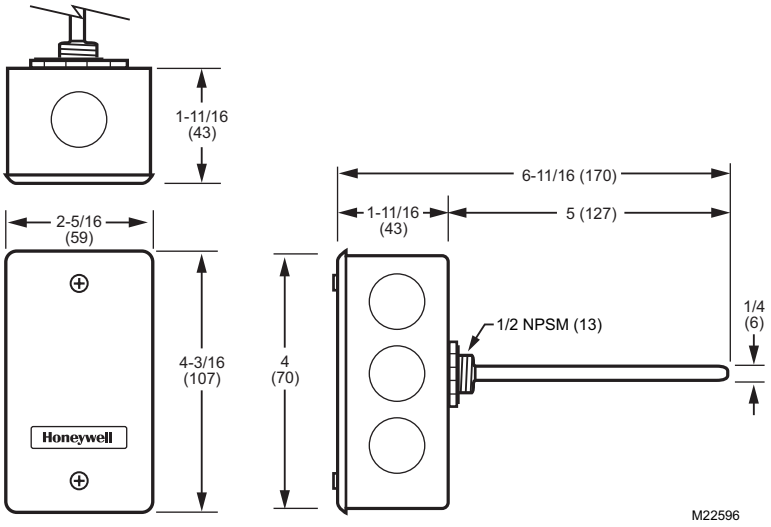

Fig. 5. C7021D, C7023D, C7031D, C7041D dimensions in in. (mm)

NOTE: The C7021D, C7023D, C7041D uses the 50001774-001 Well Assembly. See Fig. 4 for dimensions.

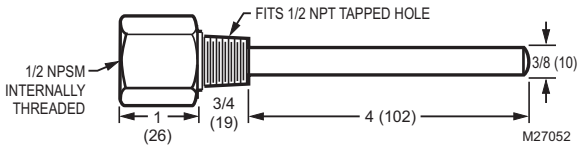

Fig. 6. 50001774-001 Immersion Well dimensions in in. (mm)

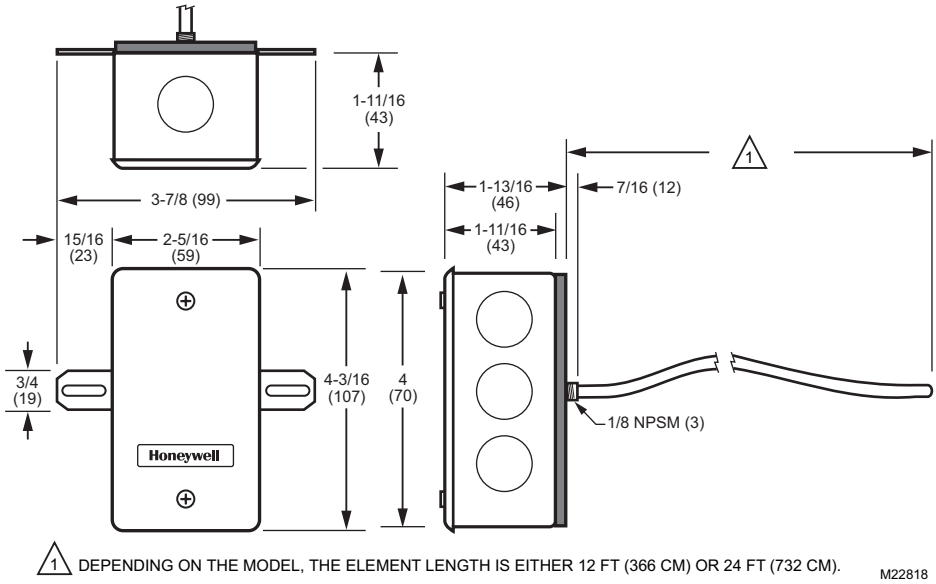

Fig. 7. C7021R, C7023R, C7041R dimensions in in. (mm).

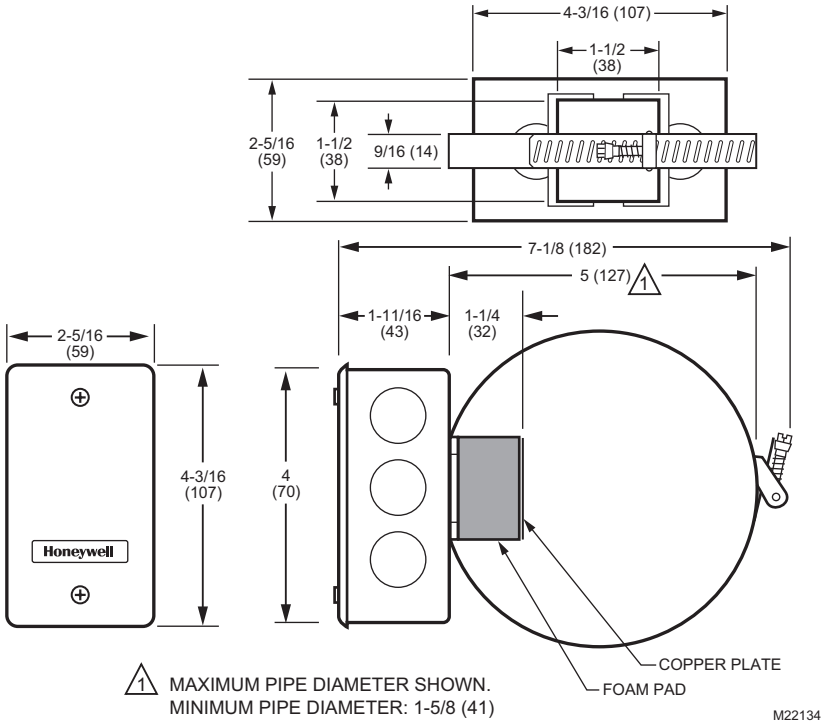

Fig. 8. C7021K, C7023K, C7041K dimensions in in. (mm).

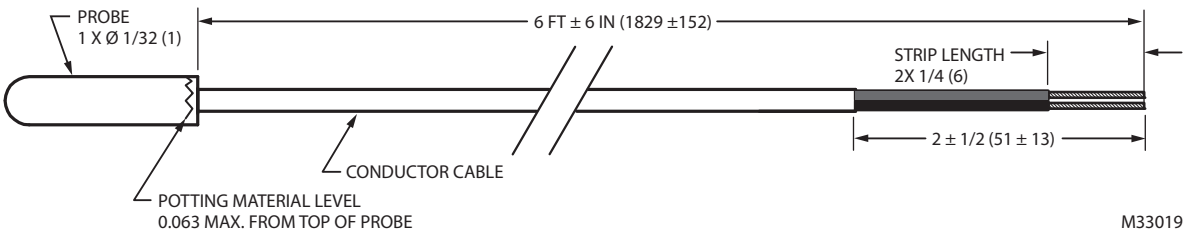

Fig. 9. C7021N, C7023N, C7041N dimensions in in. (mm).

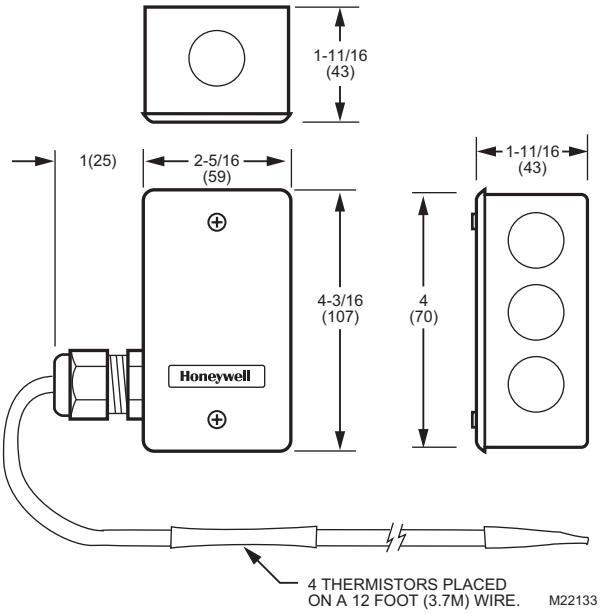

Fig. 10. C7021J, C7023J, C7031J, C7041J dimensions in in. (mm).

INSTALLATION

When Installing this Product...

1. Read these instructions carefully. Failure to follow them could damage the product or cause a hazardous condition.
2. Check the ratings given in the instructions and on the product to make sure the product is suitable for your application.
3. Installer must be a trained, experienced service technician.
4. After installation is complete, check out product operation as provided in these instructions.

⚠ CAUTION

Electrical Shock or Equipment Damage Hazard. Can shock individuals or short equipment circuitry.

Disconnect power supply before installation.

Mounting

The method of mounting depends on the particular application of the temperature sensor. The following procedures include outdoor, duct, immersion well and strap-on applications. Also refer to the instructions for the electronic control.

Outdoor Mounting (C7031G, C7021F, C7023F, C7041F)

The C7031G, C7021F, C7023F and C7041F sense outdoor air temperature. Mount this control where it can sense average outdoor air temperature. Normally, the north side of a building provides a suitable location.

NOTE: These sensors are weatherproof for outdoor use. Knockouts allow for 1/2 in. conduit connection.

1. Remove and set aside the wiring box cover.
2. Mount the sensor to standard 1/2 in. conduit.

   NOTE: Mount sensor so that the element points down.
3. Make wiring connections using two wire nuts.
4. Reattach the wiring box cover.

Duct Mounting

The C7031B, C7031J, C7021B/C/J, C7023B/C/J, C7041B/C/J can be mounted in a duct to sense air temperature.

IMPORTANT

Select a spot for the sensor where it will be exposed to average duct air temperature. Avoid locations where stratification can cause sensing errors.

C7021B,C/C7023B/C, C7041B/C MOUNTING

1. Cut a hole in the duct just large enough to accept the sensing element.
2. Use the sensor case to mark the locations of the pilot holes for the mounting screws.
3. Drill the pilot holes and fasten the sensor to the duct.

C7021J, C7023J, C7031J, C7041J MOUNTING

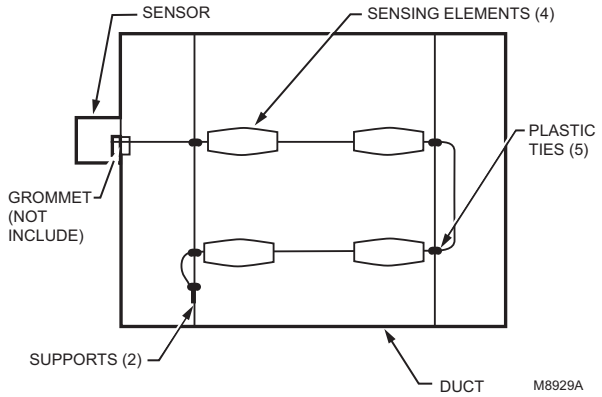

Fig. 11. Duct cross section showing method of installing C7021J, C7023J, C7031J, C7041J Averaging Electronic Sensor.

1. Install two supports inside the duct to hold the averaging element.
2. Cut a 7/8 in. (22 mm) hole in the side of the duct to insert the averaging element.
3. Fasten the terminal box to the outside of the duct and thread the element through the hole and into the duct.
4. Use plastic wire ties to fasten the element to supports. Seal the hole around the element with a rubber grommet.
5. Secure the end of the element to the duct on the support to prevent continuous flexing or abrasion.

IMPORTANT

To assure that the C7021J, C7023J, C7031J, C7041J senses average duct temperature, position the temperature elements approximately as shown in Fig. 11. Do not allow the elements to touch or be close to the duct sides.

NOTE: When the sensor is used as a deck sensor in a multizone system, be sure to space the elements equally in the duct midstream as shown in Fig. 12.

Install one C7021J, C7023J, C7031J, C7041J just upstream from the cold deck zone dampers and the other C7021J, C7023J, C7031J, C7041J upstream from the hot deck zone dampers. Position the thermistors to sense the average deck temperature.

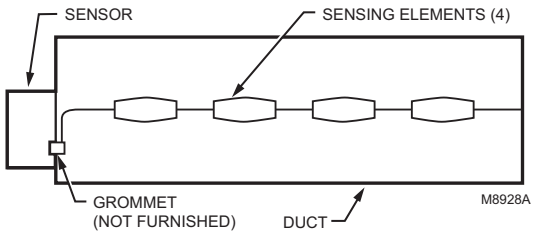

Fig. 12. Duct cross section showing method of installing C7021J, C7023J, C7031J, C7041J in a multizone system.

C7021R, C7023R, C7041R MOUNTING

1. Install two supports inside the duct to hold the averaging element.
2. Cut a 7/8 in. (22 mm) hole in the side of the duct.
3. Insert the averaging element into the duct through the hole.
4. Fasten the terminal box to the outside of the duct and thread the element through the hole and into the duct.
5. Use plastic wire ties to fasten the element to the supports. Seal the hole around the element with a rubber grommet.
6. Secure the end of the element to the duct on the support to prevent continuous flexing or abrasion.

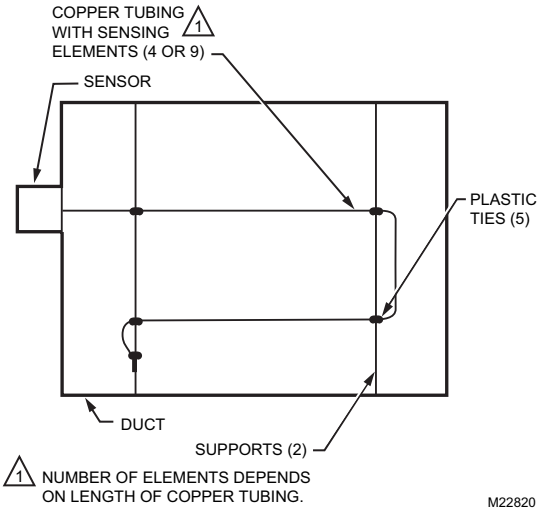

Fig. 13. Duct cross section showing method of installing C7021R, C7023R, C7041R Averaging Electronic Sensor.

IMPORTANT

To ensure that the C7021R, C7023R, C7041R senses average duct temperature, position the temperature elements approximately as shown in Fig. 13. Do not allow the elements to touch or be close to the duct sides.

NOTE: When the sensor is used as a deck sensor in a multizone system, be sure to space the elements equally in the duct midstream as shown in Fig. 14.

Install one C7021R, C7023R, C7041R just upstream from the cold deck zone dampers and the other C7021R, C7023R, C7041R upstream from the hot deck zone dampers. Position the thermistors to sense the average deck temperature.

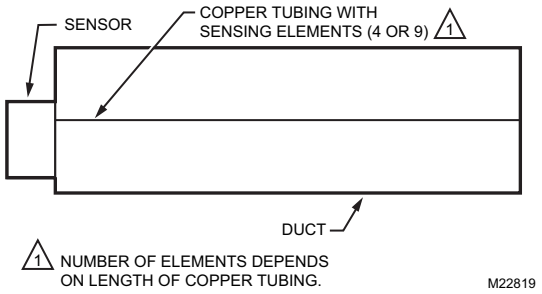

Fig. 14. Duct cross section showing method of installing C7021R, C7023R, C7041R in a multizone system.

Immersion Well Mounting (C7021D, C7023D, C7031D, C7041D)

The C7031D Sensor includes an immersion well. The C7021D, C7023D, and C7041D sensors do not include a well. For the C7021D, C7023D, and C7041D, order the well as an accessory (part no.: 50001774-001).

When used on a boiler, follow the manufacturer instructions for location. If a tapped hole is not provided for the immersion well, provide one as follows:

1. Drain boiler and drill a 23/32 in. (18 mm) hole at the selected location.
2. Cut threads in the hole with a 1/2 in. (13 mm) by 14 NPT tap.

In other installations, mount the immersion well in an elbow with a heel outlet as shown in Fig. 15.

1. Drain the system, if you have not already done it, and open the tapped hole.
2. Put pipe joint compound on the threads of the immersion well and screw it into the tapped hole or elbow, tightening it securely.
3. Refill the system and check for leaks.

Mount the C7021D, C7023D, C7031D and C7041D into the well:

NOTE: Mounting using previously installed Honeywell wells (part no.: 32005960-001) requires an adapter (part no.: 50001775-001).

1. When an adapter is required, first thread it into the well no more than one or two turns.
2. Slide the sensor into the well.
3. Rotate the sensor to thread it tightly into the adapter and the adapter tightly into the well.

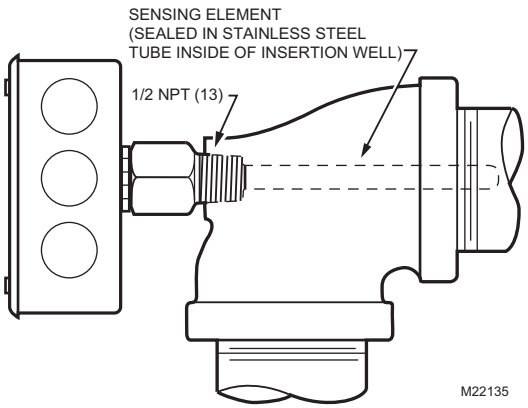

Fig. 15. Method of mounting C7021D, C7023D, C7031D, C7041D Sensor.

Strap-On Mounting (C7021K, C7023K, C7041K)

Strap-on mounting is well-suited for retrofit applications where installation costs can be reduced by not draining the system. The C7021K, C7023K, C7041K Sensor mounts on metal pipes from 1-5/8 inch to five inches in diameter using the straps supplied. Clean the surface of the pipe where the sensor makes contact before mounting (remove insulation from the pipe at the point of installation if necessary). Thermal compound is recommended with the strap-on C7021K, C7023K, C7041K Sensor. Locate the sensor on the discharge pipe within 3 feet (0.9m) of the boiler. See Fig. 16.

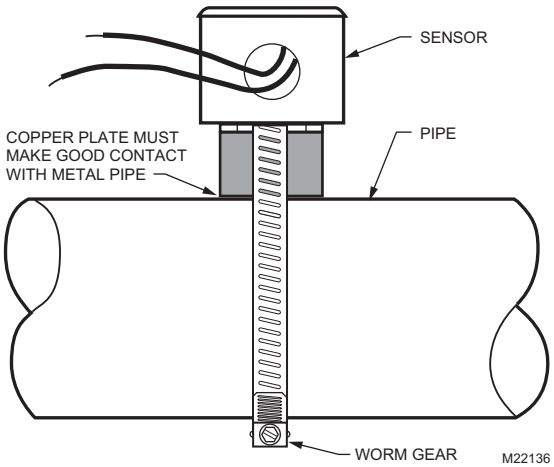

Fig. 16. Strap-on mounting of C7021K, C7023K, C7041K Sensor.

NOTE: Insulation around the contact area increases sensor accuracy.

Button Probe Mounting

The C7021P, C7023P, C7041P Button Probe Sensor design simplifies mounting into a variety of standard structural materials.

The locking nut can be used to secure the probe. See Fig. 18.

The plastic spacer helps insulate the probe from drywall, wood, or other material in which the probe is mounted. The spacer is sized to fit snugly into 1/2 in. metal conduit. See Fig. 17.

NOTES:
— The plastic spacer is threaded for easy installation.
— Use of both the locking nut and spacer requires cutting spacer to shorter length.

C7041P MOUNTING RECOMMENDATIONS

Determine the proper location based upon the following:
— Mount the probe to an inside wall approximately 54 in. (1372 mm) from the floor (or in the specified location) to allow exposure to the average zone temperature.
— Do not mount the probe to an outside wall, a wall containing waterpipes, or near air ducts.
— Avoid locations exposed to register discharge air, or radiation from lights, appliances, or the sun.

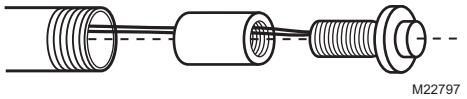

Fig. 17. Mounting sensor in conduit.

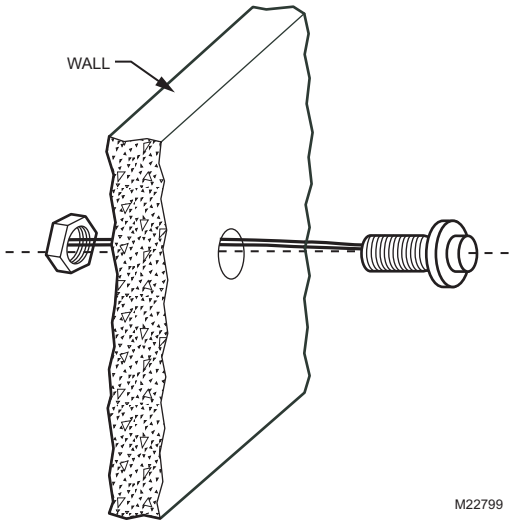

Fig. 18. Mounting sensor in wall with nut only.

Bullet Probe Sensor Mounting (C7021N, C7023N, C7041N)

The bullet probe sensor is a water-resistant sensor that provides a cost-effective solution for surface contact temperature measurement of conditioned water pipes, low pressure steam or refrigerant lines. These sensors are ideal for applications where immersion wells are not practical to install. These sensors can also be use to sense air temperature.

WIRING

⚠ CAUTION

Erratic System Operation Hazard.
Failure to follow proper wiring practices can introduce disruptive electrical interference (noise).

Keep wiring at least one foot away from large inductive loads such as motors line starters, lighting ballasts, and large power distribution panels.

Shielded cable is required in installations where these guidelines cannot be met.

Ground shield only to grounded controller case.

⚠ CAUTION

Electrical Shock or Equipment Damage Hazard.
Can shock individuals or short equipment circuitry.

Disconnect power supply before installation.

IMPORTANT

1. *All wiring must agree with applicable codes, ordinances and regulations.*
2. *Do not mount sensor in incorrect environment.*
3. *Wire according to the applicable controller instructions.*

OPERATION AND CHECKOUT

Operation

The C7041 Temperature Sensors are designed for use with XL500, XL100, XL50, XL15, XL10, and Honeywell LCBS Controllers or any controller requiring 20K ohm NTC non-linear input. As the temperature at the C7041 Sensor increases, the resistance of the sensor decreases, causing the controller to operate and offset the temperature change.

The C7021 Temperature Sensors are designed for use with the TB7600, TB7300, and TB7200 Series Communicating Thermostats or any controller requiring a 10K ohm NTC Type II input.

The C7023 Temperature Sensors are designed for use with WEBs-AX I/O Modules or any controller requiring a 10K ohm NTC Type III input.

Checkout

Refer to the applicable controller instructions when checking out the complete heating and cooling systems.

To check out the sensors, move the thermostat or remote setpoint potentiometer below the temperature of the cooling or heating medium. Watch the motor, valve or damper for the correct movement.

By using this Honeywell literature, you agree that Honeywell will have no liability for any damages arising out of your use or modification to, the literature. You will defend and indemnify Honeywell, its affiliates and subsidiaries, from and against any liability, cost, or damages, including attorneys' fees, arising out of, or resulting from, any modification to the literature by you.

Automation and Control Solutions
Honeywell International Inc.
1985 Douglas Drive North
Golden Valley, MN 55422
customer.honeywell.com

Honeywell

® U.S. Registered Trademark
© 2015 Honeywell International Inc.
63-2590—06 M.S. Rev. 06-15
Printed in United States