VALUE SHOPPER GENERATION 3 XL BASKET #440300 (EXPLODED VIEW)

DECEMBER 2010 – PRESENT

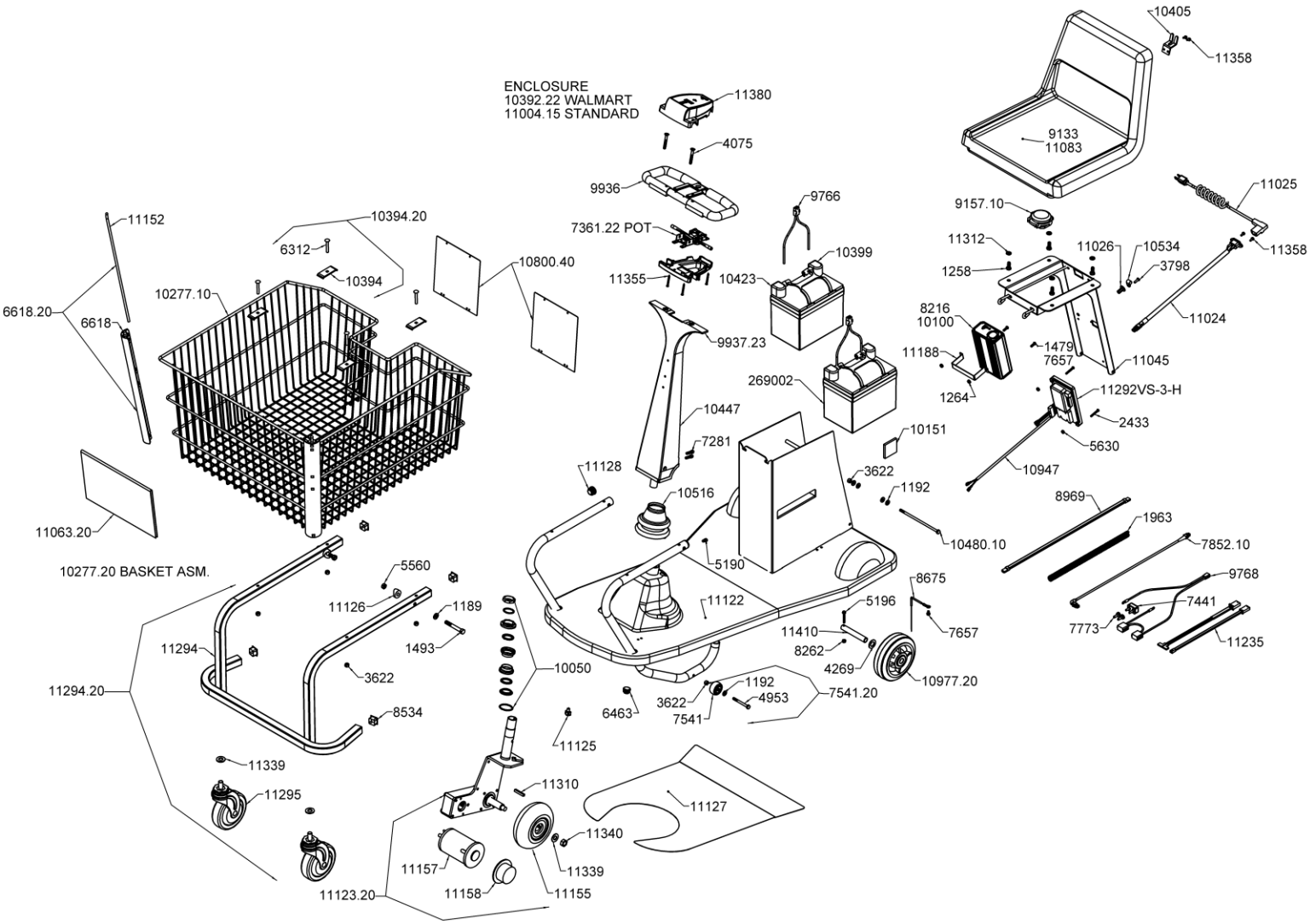

AMIGO MOBILITY INTERNATIONAL, INC.

6693 Dixie Highway • Bridgeport, MI 48722-9725

Phone: (800) 248-9131 • Fax: (800) 334-7274 • www.myamigo.com

VALUE SHOPPER GENERATION 3 XL BASKET #440300 PARTS LIST – DECEMBER 2010 – PRESENT

Part #	Description	Qty/unit	Part #	Description	Qty/unit
1189	Washer, Cone Lock, 3/8 ID x 3/4 OD	2	10405	Bracket, Power Cord Holder	1
1192	Washer, Flat, 9/32 ID x 5/8 OD	6	10423	Boot, Battery Terminal, Black	2
1258	Screw, Hex, 5/16-18 x 3/4 Lg	4	10447	Plate, Column Back	1
1264	Nut, Hex, Keps, #10-32 (10100 Only)	2	10480.10	Screw, Hex, 1/4-20 x 6 1/2 Lg	1
1479	Screw, Phillips, #10-32 x 5/8 Lg (10100 Only)	2	10516	Boot, Lower Handle	1
1493	Screw, Hex, 3/8-16 x 2 3/4 Lg	2	10534	Clamp, 5/16 Nylon Cable	1
1963	Loom, Wire	42	10800.40	Sign Asm, Operation & Safety English/Spanish	1
2433	Screw, Phillips, #8-32 x 1 1/4	2	10947	Wire Asm, 18 Pin Controller Interface	1
3622	Nut, Hex, Nylon Insert, 1/4-20	7	10977.20	Wheel Asm, 6" Rear	2
3798	Screw, Phillips, #10-24 x 5/8 Lg	1	11004.15	Enclosure Asm w/ Rocker Switch	1
4075	Screw, Flat Head Hex Socket, 1/4-20 x 2 Lg	2	11024	AC Receptacle	1
4269	Washer, Flat, 5/8 ID x 1 1/8 OD	2	11025	Power Cord, AC Retractable	1
4953	Screw, Hex, 1/4-20 x 2 1/2 Lg	2	11026	Jacknut, #10-24	1
5190	Screw, Hex Socket, 1/4-28 x 3/8 Lg	1	11045	Pedestal Cover	1
5196	Screw, Hex, #10-32 x 1 1/2 Lg	2	11063.20	Sign Asm "For Our Valued Members"	1
5560	Nut, Hex Nylon Jam, 3/8-16	2	11083	Seat, Heavy Duty, PVC Free	1
5630	Nut, Hex, Keps, #8-32	2	11122	Platform, Black	1
6312	Screw, Carriage, 1/4-20 x 1 3/4 Lg	4	11123.20	Drive Asm, Front w/ Brake	1
6463	Plug, Round, 7/8" OD	1	11125	Clip, Wire Guide	3
6618	Bumper, Basket, Vertical	2	11126	Washer, Nylon Curved	2
6618.20	Bumper, Basket, Asm	2	11127	Mat, Standard	1
7281	Screw, Hex Socket, 1/4-20 x 7/8 Lg	2	11128	Plug, Round, 1" OD	2
7361.22	Pot Asm, Hall Effect Commercial	1	11130	Label, Pedestal, Blue	1
7441	Circuit Breaker, Auto Reset, 25 Amp	1	11133	Label, Pedestal, Red	1
7541	Wheel, Stability, 1 5/8	2	11152	Rod, Basket Bumper	2
7541.20	Wheel Asm, Stability, 1 5/8	2	11155	Wheel Asm, Front Gear Drive	1
7657	Screw, Hex Washer, Self Tap, #10-32 x 3/8 Lg (Qty 3, 8216)	1	11157	Motor, Front Gear Drive	1
7773	Cap, Vinyl Insulated	2	11158	Brake Asm, Front Gear Drive	1
7852.10	Wire Asm, Charger To Controller	1	11166	Label, Front, Blue	1
8216	Charger, 3 Amp	1	11167	Label, Front, Red	1
8262	Nut, Hex, Nylon Insert, #10-32	2	11188	Strap, 7 Amp Charger (10100 Only)	1
8534	Plug, Tube Square, 1"	4	11235	Wire Harness Asm, Front Gear Drive	1
8675	Ground Wire Asm	1	11242	Label, Pedestal Light Green	1
8969	Cable, MPC Handle Control	1	11243	Label, Front, Light Green	1
9133	Seat, Shopper	1	11248	Label, Pedestal, Light Blue	1
9157.10	Switch, Seat	1	11294	Bracket, XL Basket Support	1
9766	Wire Asm, Battery To Quick Connector	2	11294.20	Bracket, XL Basket Support Asm	1
9768	Wire Asm, Battery Quick Connector To Controller	1	11295	Caster Asm, 5"	2
9936	Handle, Upper	1	11310	Key, Axle	1
9937.23	Column Asm Non-Tilt Handle	1	11312	Washer, Lock, 5/16 ID x 19/32 OD	4
10050	Bearing Set	1	11339	Washer, Flat, 17/32 ID x 1 1/16 OD	3
10100	Charger, 7 Amp	1	11340	Nut, Hex, Lock, 1/2-20	1
10151	Foam Insert, Adhesive Backed	5	11355	Screw, Phillips, #6 x 1 1/2 Lg	4
10277.10	Basket, XL	1	11358	Screw, Hex Washer, Self Tap, #8-32 x 3/8 Lg	4
10277.20	Basket Asm XL	1	11380	Housing, Enclosure (w/o 7361.22)	1
10392.22	Enclosure Asm Walmart w/ Rocker Switch	1	11410	Axle, Short	2
10394	Strap Basket Support	4	269002	Battery, 12 Volt, 33 AH (U-1)	2
10394.20	Strap Basket Support Asm	4	11292VS-3-H	Controller CS1108S-1 Standard	1
10399	Boot, Battery Terminal, Red	2			

December 2010

AMIGO MOBILITY INTERNATIONAL, INC.
6693 Dixie Highway • Bridgeport, MI 48722-9725
Phone: (800) 248-9131 • Fax: (800) 334-7274 • www.myamigo.com

VALUE SHOPPER GENERATION 3 #440300 (WIRING DIAGRAM)

SEPTEMBER 2010 – PRESENT

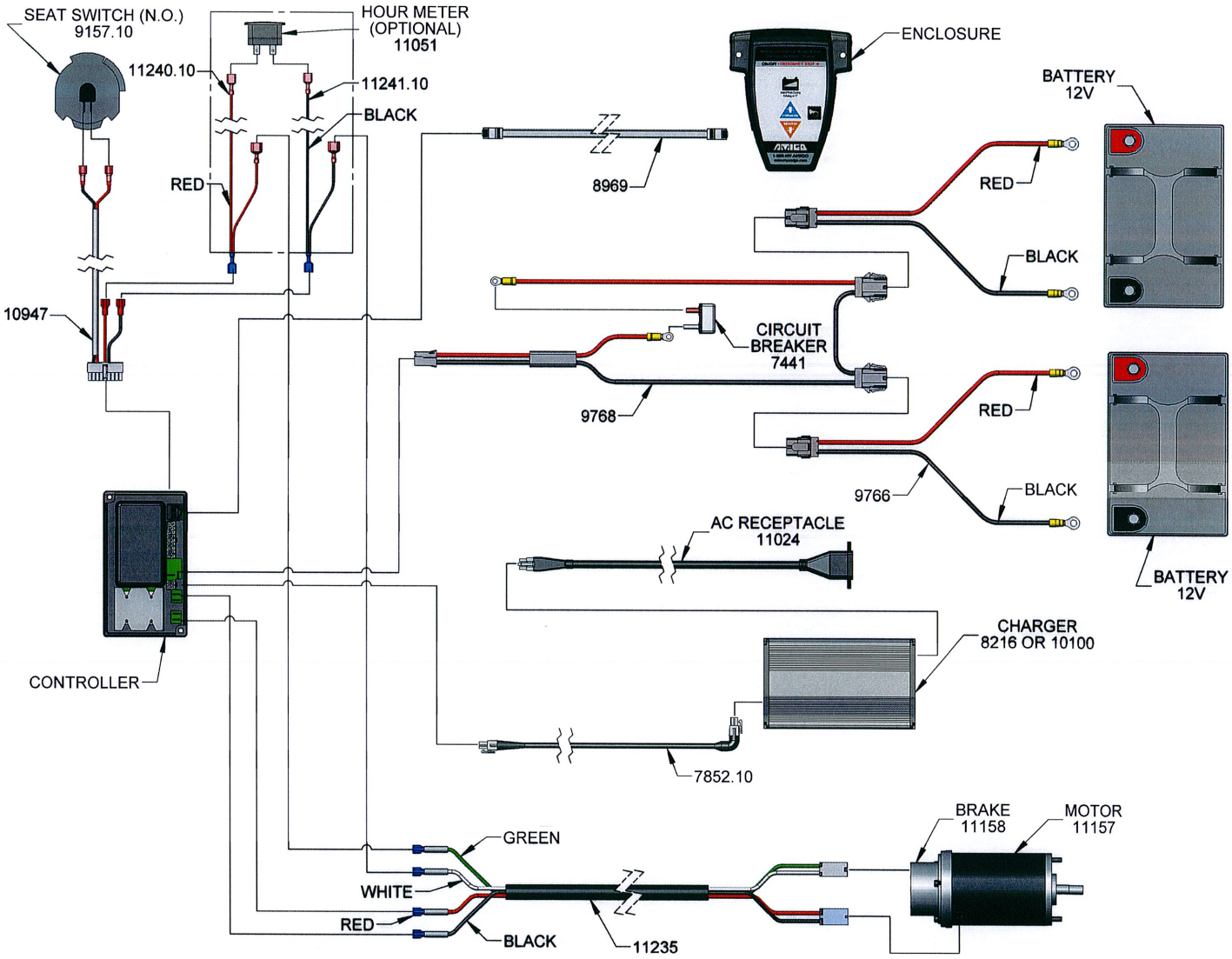

Approvals _____

AMIGO MOBILITY INTERNATIONAL, INC.

6693 Dixie Highway • Bridgeport, MI 48722-9725

Phone: (800) 248-9131 • Fax: (800) 334-7274 • www.myamigo.com