WALMART VALUE SHOPPER GENERATION 2 #440000 (EXPLODED VIEW)

AUGUST 2004 – SEPTEMBER 2006

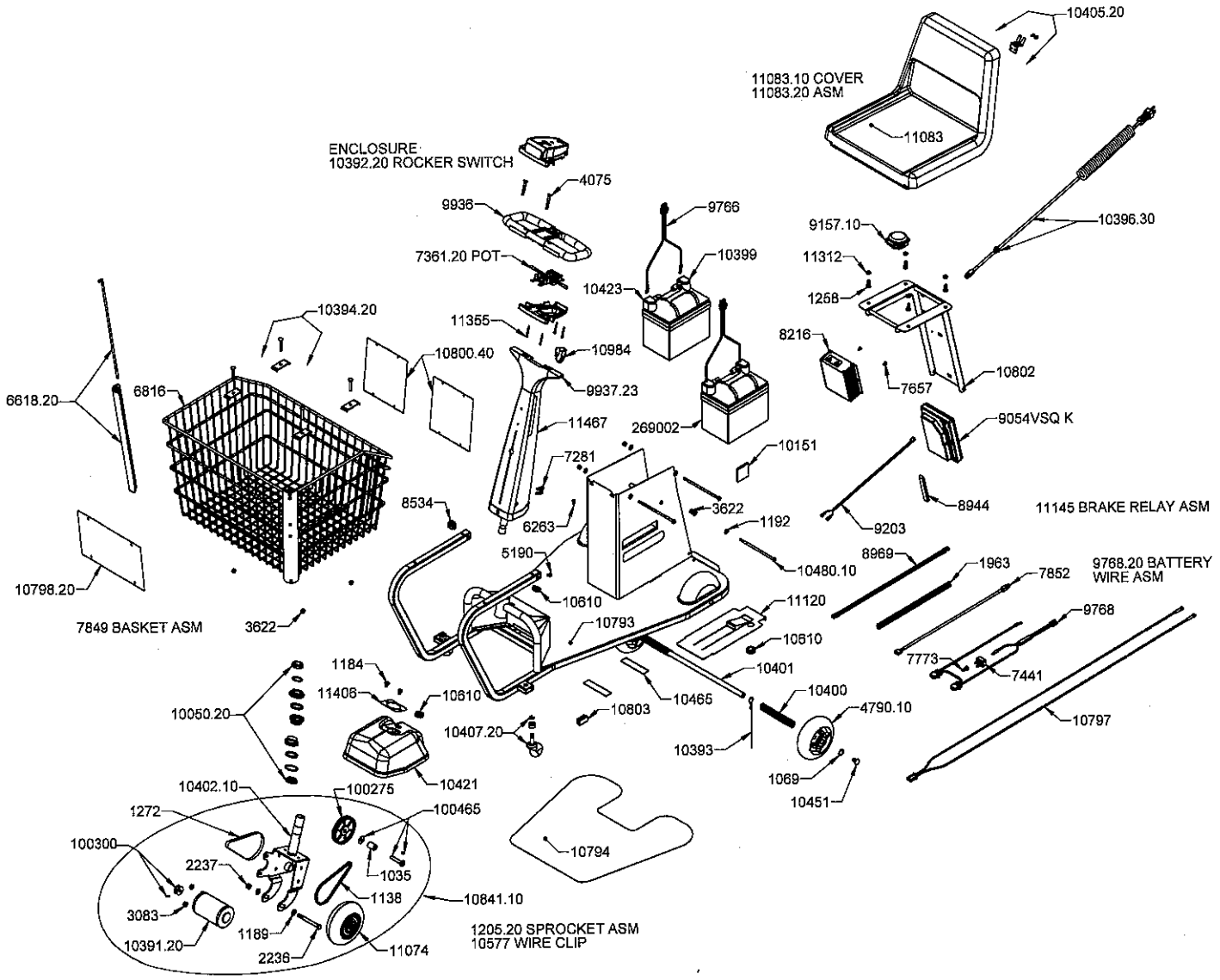

Approvals CJR

AMIGO MOBILITY INTERNATIONAL, INC.

6693 Dixie Highway • Bridgeport, MI 48722-9725

Phone: (800) 248-9131 • Fax: (800) 334-7274 • www.myamigo.com

WALMART VALUE SHOPPER GENERATION 2 #440000 PARTS LIST – AUGUST 2004 – SEPTEMBER 2006

Part #	Description	Qty/unit	Part #	Description	Qty/unit
1035	Bushing, Jackshaft	1	10391.20	Motor Asm w/ Pulley	1
1069	Washer, Shim, 5/8 ID x 7/8 OD x .016 Thick	3	10392.32	Enclosure Asm w/ Horn & Rocker Switch	1
1138	Chain, Drive	1	10393	Ground Wire Asm	1
1184	Screw, Truss Head, 1/4-20 x 1/2 Lg	2	10394.20	Strap Basket Support Asm	4
1189	Washer, Cone Lock, 3/8 ID x 3/4 OD	2	10396.30	Power Cord, AC Retractable w/ Bushing	1
1192	Washer, Flat, 9/32 ID x 5/8 OD	3	10399	Boot, Battery Terminal, Red	2
1205.20	Sprocket Asm	1	10400	Spring, Compression 21/32 ID x 6 Lg	2
1258	Screw, Hex, 5/16-18 x 3/4 Lg	4	10401	Axle Long	1
1272	Belt, Gear Type	1	10402.10	Fork Weldment Value Shopper	1
1963	Loom, Wire	47	10405.20	Bracket, Power Cord Holder Asm	1
2236	Screw, Hex, 3/8-24 x 3 3/4 Lg	1	10407.20	Wheel Asm, Stability	2
2237	Nut, Hex, 3/8-24	1	10421	Wheelhousing Red	1
3083	Nut, Hex Serrated Flange, 1/4-20	2	10423	Boot, Battery Terminal, Black	2
3622	Nut, Hex, Nylon Insert, 1/4-20	7	10451	Plug, Round 3/8 OD	2
4075	Screw, Flat Head Hex Socket, 1/4-20 x 2 Lg	2	10465	Strap, Wire Support	2
4790.10	Wheel Asm, 6" Rear	2	10480.10	Screw, Hex, 1/4-20 x 6 1/2 Lg	3
5190	Screw, Hex Socket, 1/4-28 x 3/8 Lg	1	10577	Clip, Wire Guide	1
6263	Screw, Phillips, Self Tap, #10-32 x 3/4 Lg	1	10610	Grommet, 5/8 ID x 7/8 OD	3
6618.20	Bumper, Basket, Asm	2	10793	Platform, Value Shopper Black	1
6816	Basket, Shopper	1	10794	Mat, Standard	1
7281	Screw, Hex Socket, 1/4-20 x 7/8 Lg	2	10797	Wire Asm, Drive to Controller	1
7361.20	Pot Asm, Commercial	1	10798.20	Sign Asm, "For Our Valued Customers"	1
7441	Circuit Breaker, Auto Reset, 25 Amp	1	10800.40	Sign Asm, Operation & Safety English/Spanish	1
7657	Screw, Hex Washer, Self Tap, #10-32 x 3/8 Lg	2	10802	Pedestal Cover	1
7773	Cap, Vinyl Insulated	2	10803	Plug, Tube Rectangle, 1 1/2 x 3/4	2
7849	Basket Asm, Shopper (Complete)	1	10841.10	Drive Head 9 Tooth Top Slot	1
7852	Wire Asm, Charger To Controller	1	10984	Cover Handle Wire	1
8216	Charger, 3 Amp	1	11074	Wheel Asm, 6 Inch	1
8534	Plug, Tube Square, 1"	2	11083	Seat, Shopper, PVC Free	1
8944	Band, Retaining	1	11083.10	Seat Cover, Shopper, PVC Free	1
8969	Cable, MPC Handle Control	1	11083.20	Seat Asm, Shopper, PVC Free	1
9054VSQK	Controller	1	11120	Retainer, Battery	1
9157.10	Switch, Seat	1	11145	Brake Relay Asm	1
9203	Wire Asm, Seat Switch	1	11312	Washer, Lock, 5/16 ID x 19/32 OD	4
9766	Wire Asm, Battery To QC	2	11355	Screw, Phillips, #6 x 1 1/2 Lg	4
9768	Wire Asm, Battery QC To Controller	1	11406	Flange Wheel Housing	1
9768.20	Wire Asm, Battery QC To Controller Asm	1	11467	Plate, Back, Standard, Non Tilt	1
9936	Handle, Upper	1	100275	Pulley, Driven, 60 Tooth	1
9937.23	Column Asm , Standard, Black, Non-Tilt	1	100300	Pulley and Spring Pin	1
10050.20	Bearing Asm	1	100465	Jackshaft 9 Tooth, Key, and Washer	1
10151	Foam Insert, Adhesive Backed	4	269002	Battery, 12 Volt, 33 AH (U-1)	2

Approvals CJR

AMIGO MOBILITY INTERNATIONAL, INC.
6693 Dixie Highway • Bridgeport, MI 48722-9725
Phone: (800) 248-9131 • Fax: (800) 334-7274 • www.myamigo.com
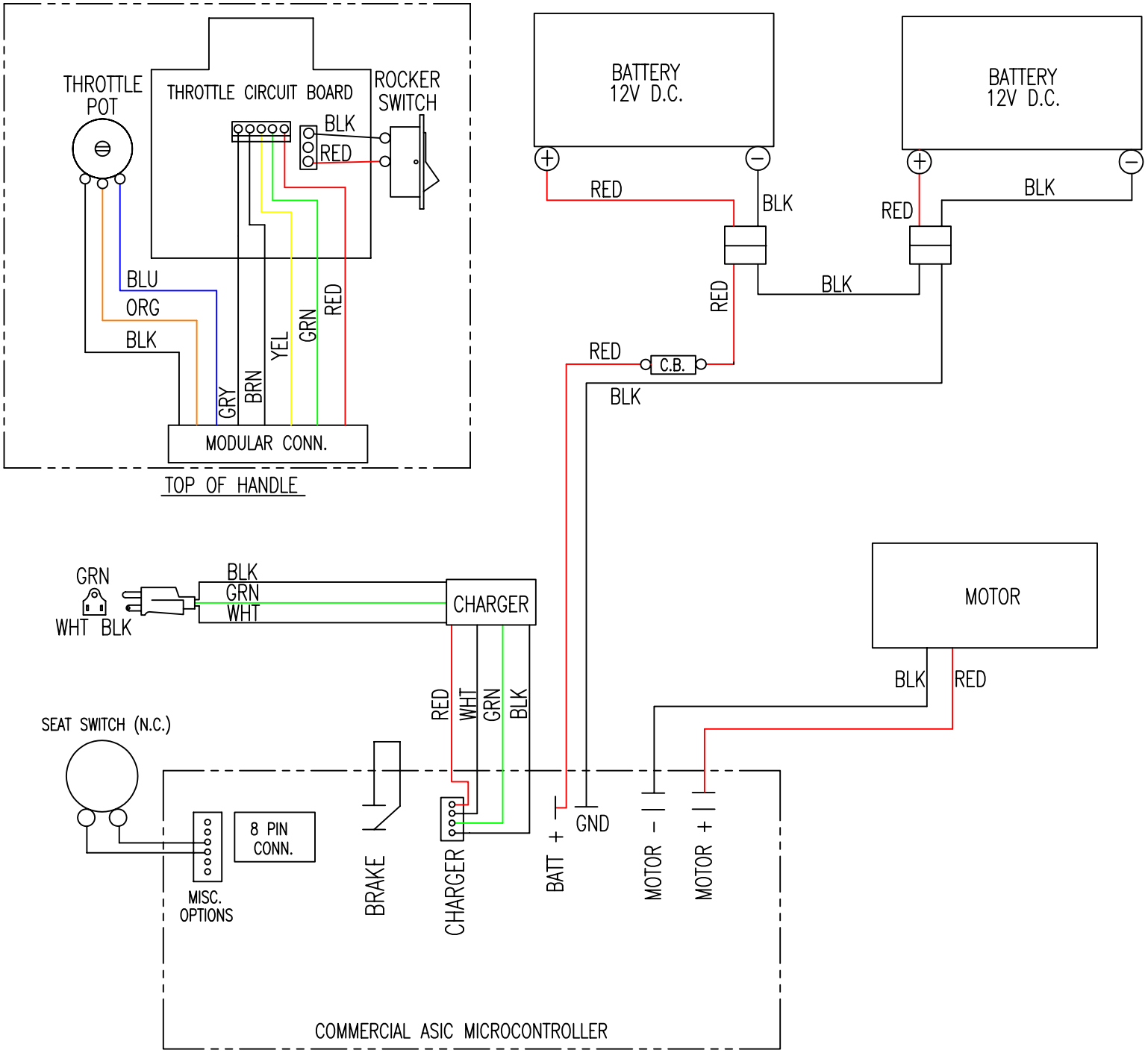
WALMART WIRING DIAGRAM